CODEL
Monitoring Solutions

EnergyTech 501 Series - Ambient Dust Monitor

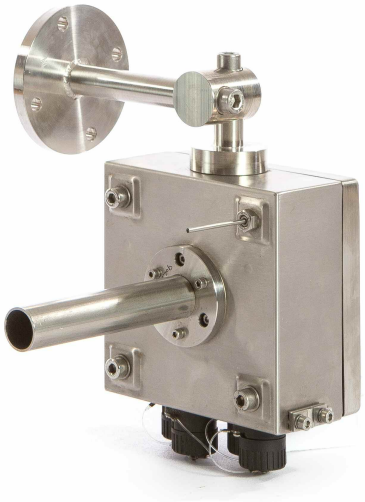

Early detection of coal fires is essential to prevent serious injury to personnel and extensive damage to expensive plant.

- Analogue & digital - communication to DCS and SCADA systems
- High resolution measurement
- Minimal maintenance requirements
- Available in 316 Stainless Steel

ISO 9001:2008
Quality Certification

Monitoring Solutions

EnergyTech

www.codel.co.uk

EnergyTech 501 Series - Ambient Dust Monitor

The EnergyTech 501 is a monitoring device for coal handling, processing and storage applications.

The early detection of coal fires in coal handling, processing and storing systems on coal fired power stations is essential to prevent catastrophic damage to expensive plant and serious injury to personnel.

By measuring visibility levels we can give an indication that smoke/dust is present and trigger containment procedures.

Class leading Accuracy, Repeatability and Resolution

Fully configurable analogue and alarm outputs are exportable to the data acquisition system to provide real-time visibility data.

This data is also exported via the RS 485 serial port along with the temperature data. This link can deliver MODBUS RTU encoded data to a SCADA system located in the control centre and/or a local display module.

EnergyTech 501 Series - Ambient Dust Monitor

The EnergyTech 501 Ambient Dust Monitor, is an essential part of any application where ambient dust is present such as coal handling, processing and storage. By monitoring the ambient visibility of the handling processes the EnergyTech 501 provides an alarm output for use in containment control.

Fully configurable analogue and alarm outputs are exportable to the plant data acquisition system to provide real-time visibility data. This data is also exported via the RS 485 serial port along with the temperature data. This link delivers MODBUS RTU encoded data to a SCADA system located in the plant control centre and/or a local display module.

In addition, the IP65 rated enclosure are coated to resist attack from harsh and aggressive atmospheres.

In areas where extremely low temperatures may be experienced, optional transmitter and receiver insulation jackets are available to reduce the effect.

The optionally local display driven from the RS485 out-enables operators to view output data, diagnostics and alarm setpoints.

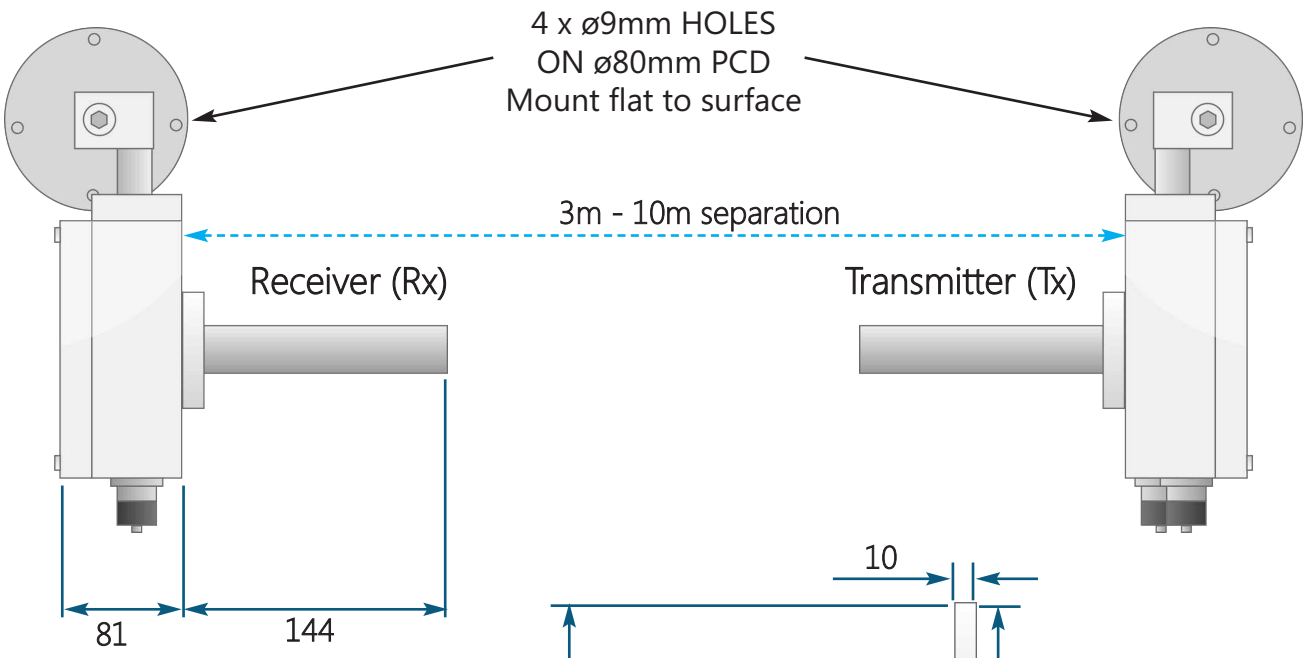

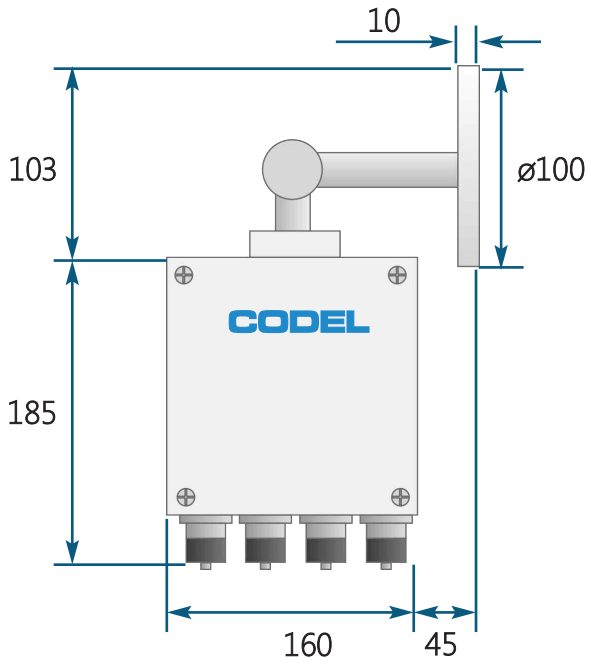

All sizes are in mm

Connecting cable length between Rx & Tx supplied by customer

Rx Head weight : 4kg
Tx Head weight : 4kg

Technical Specification

Sensor Unit

Measurement	Visibility
Measuring units	K factor(M-1) or metres
Measurement Technique	Transmissometry (de Beer Lambert Law)
Measurement Range (Typical)	0 - 0.015m-1
Accuracy	+/- 0.0002 m-1
Resolution	+/- 0.0001 m-1
Averaging Time	From 10 seconds to 2 minutes
Ambient Temperature Range	-20°C to +50°C
Temperature Sensor (Optional)	PT100, -15°C to +105°C
Power Supply	24V DC
Construction	316L S/S (Other grades on request)

Compliances

EMC Directives	EN61326-1:2006 & EN50270:2006 directive compliant
Low Voltage	73/23/EEC directive compliant
Protection Class	IP65

Customer Interface

Analogue outputs	2 x 4-20mA isolated current output, 500Ω maximum load, fully configurable via provided software.
Relay Outputs	1 x volt-free SPCO contacts, 50V, 1A maximum load, configurable as alarm contacts
Communications Port	RS485 - Modbus RTU

Optional Items

Power Supply	110/220VAC, 50Hz +/-10%, 60W @ 24V
Optical Density Filter	For manual calibrations

CODEL International LTD
Station Building
Station Road
Bakewell
Derbyshire
DE45 1GE

Tel : +44 (0)1629 814351
Fax : +44 (0)1629 566307
Web : www.codel.co.uk
email : Sales@codel.co.uk

Distributor